Instructions and parts list for SMITH & WESSON High Power Rifles Models A, B, C, D and E

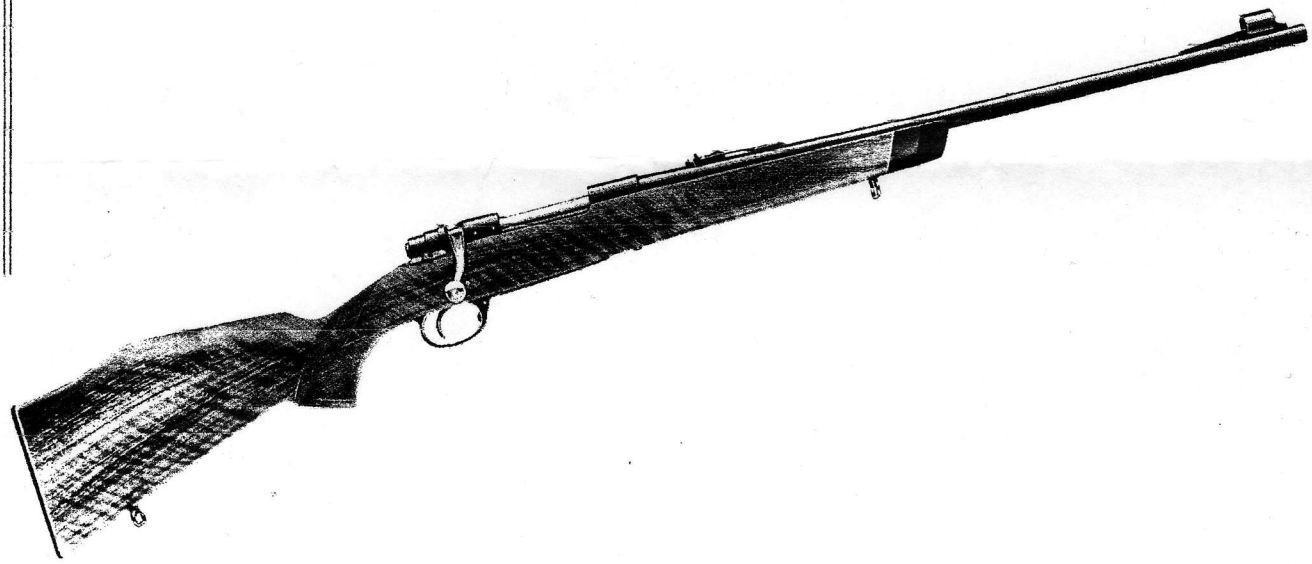

SMITH & WESSON
OF BANGOR PUNTA
Springfield, Massachusetts, U. S. A.

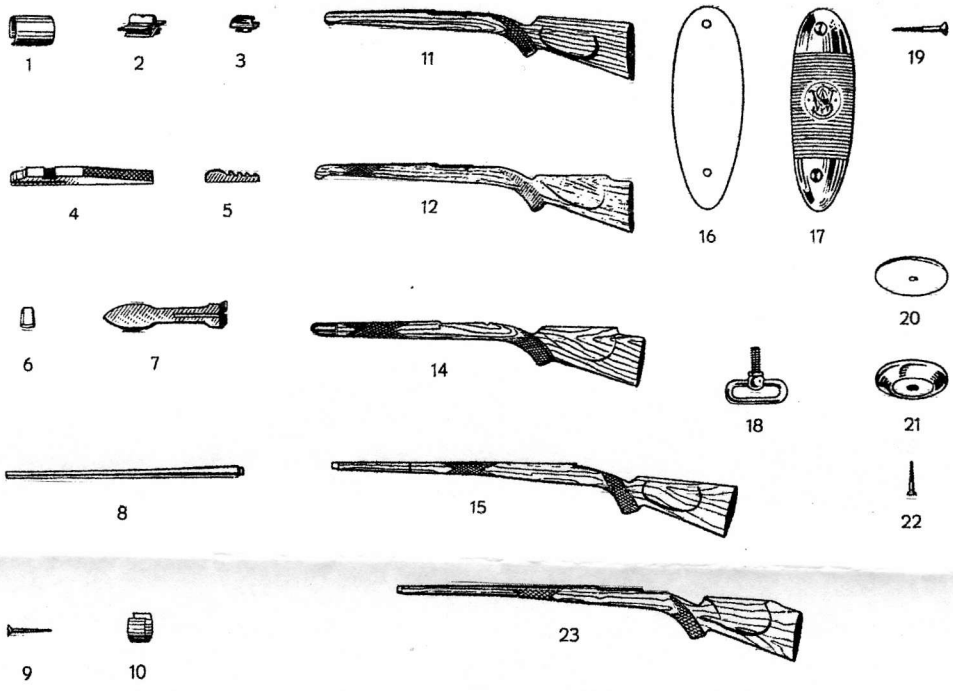

Fig. pos.	Part No.	Price	Model A	Model B	Model C	Model D	Model E	Name
1	60 46 030-01	$ 1.25	X	X	X	X	X	Hood, for front sight
2	60 64 460-01	11.50	—	X	—	—	—	Leaf sight
3	60 64 034-01	1.75	X	X	X	X	X	Front sight, height 10,35 mm
	60 64 034-02	1.75	X	X	X	X	X	" " " 10,10 "
	60 64 034-03	1.75	X	X	X	X	X	" " " 9,85 "
	60 64 034-04	1.75	X	X	X	X	X	" " " 9,60 "
	60 64 034-05	1.75	X	X	X	X	X	" " " 9,35 "
	60 64 034-06	1.75	X	X	X	X	X	" " " 9,10 "
	60 64 034-07	1.75	X	X	X	X	X	" " " 8,85 "
4	60 64 033-01	2.55	X	—	—	—	—	Ramp
	60 64 118-01	2.55	—	X	X	X	X	"
5	60 64 019-01	.55	X	—	X	X	X	Sight regulator, height 3,5 mm
	60 64 019-02	.55	X	—	X	X	X	" " " 3,25 "
	60 64 019-03	.55	X	—	X	X	X	" " " 3,00 "
	60 64 019-04	.55	X	—	X	X	X	" " " 2,75 "
	60 64 019-05	.55	X	—	X	X	X	" " " 2,50 "
	60 64 019-06	.55	X	—	X	X	X	" " " 2,25 "
	60 64 019-07	.55	X	—	X	X	X	" " " 2,00 "
6	60 64 096-01	.55	X	—	—	—	—	Filling piece for dove tail slot
7	60 64 035-01	5.25	X	—	—	—	—	Sporting rear sight
	60 62 267-01	5.25	—	—	X	X	X	" " "
8	60 64 357-01	38.50	X	—	—	—	—	Barrel, cal. .308 Win.
	60 64 457-01	38.50	X	—	—	—	—	" " .270 Win.
	60 64 757-01	38.50	X	—	—	—	—	" " .30-06 Spfld.
	60 65 057-01	38.50	X	—	—	—	—	" " .243 Win.
	60 64 358-01	38.50	—	X	X	X	X	" " .308 Win.
	60 64 458-01	38.50	—	X	X	X	X	" " .270 Win.
	60 64 758-01	38.50	—	X	X	X	X	" " .30-06 Spfld.
	60 65 058-01	38.50	—	X	X	X	X	" " .243 Win.
9	24 00 351-01	.30	—	—	—	X	X	Screw for part 60 64 188
10	60 64 188-01	3.40	—	—	—	X	X	Stock holder for full stocks
11	60 64 176-01	73.00	—	—	X	—	—	Stock with narrow fore end and cheekrest
12	60 64 178-01	80.20	—	X	—	—	—	Stock "Monte Carlo"
14	61 10 026-01	101.60	X	—	—	—	—	Stock "Monte Carlo"
15	60 64 187-01	83.50	—	—	—	X	—	Full stock for light weight barrel
16	60 64 017-01	.55	X	—	—	—	—	White inlay for butt end
17	61 10 043-01	1.35	X	X	X	X	X	Butt plate
18	60 10 012-01	1.25	X	X	X	X	X	Sling swivel 1"
19	24 44 416-01	.30	X	X	X	X	X	Screw for butt plate
20	60 64 016-01	.40	X	—	—	—	—	White inlay for pistol grip
21	60 31 027-01	.55	—	X	X	X	X	End plate for pistol grip
22	24 04 310-01	.30	—	X	X	X	X	Screw for pistol grip end plate
23	60 64 192-01	86.00	—	—	—	—	X	Full stock, "Monte Carlo"

Please include serial number of rifle and indicate barrel length when ordering. Without front or rear sights.

VESSON

ST

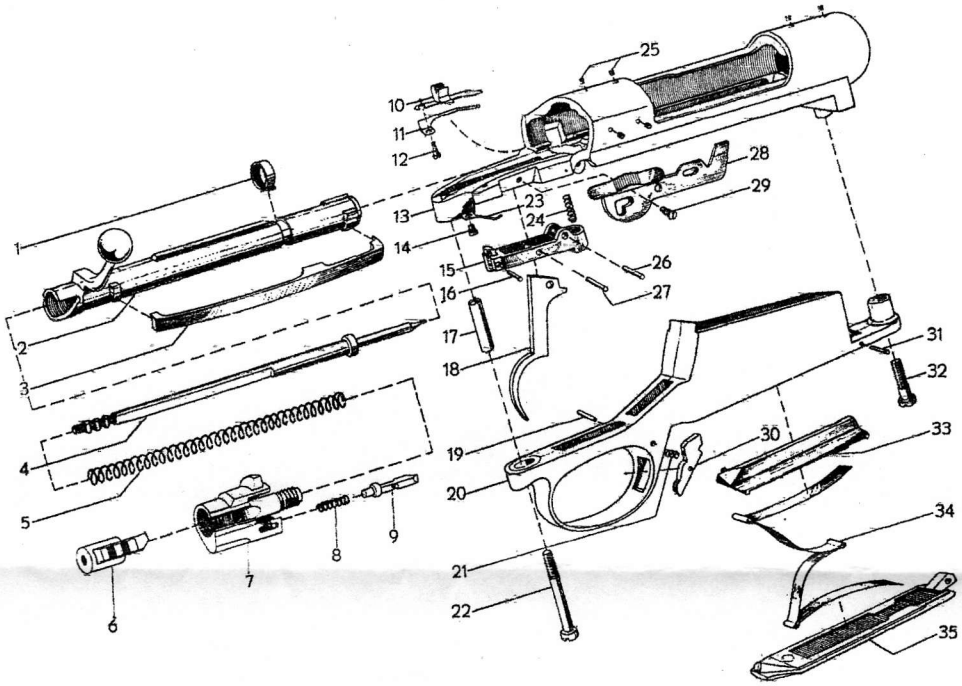

Fig. pos.	Part No.	Price	Name
1 - 9	60 64 157-03	$44.95	Breech bolt complete
	60 64 157-01	56.00	Breech bolt, complete, jeweled
1	60 64 061-01	1.45	Extractor ring
	60 64 061-02	1.85	Extractor ring, jeweled
2	60 64 158-01	34.50	Breech bolt
	60 64 158-02	45.75	Breech bolt, jeweled
3	60 64 062-01	6.25	Extractor
	60 64 062-02	6.25	Extractor, jeweled
4	60 64 063-01	4.25	Firing pin
5	60 64 064-01	.70	Firing pin spring
6	60 64 070-01	5.70	Firing pin nut
7	60 64 065-01	8.50	Breech bolt sleeve
8	60 64 068-01	.30	" " " lock spring
9	60 64 069-01	1.20	" " " lock
10	60 64 151-01	3.45	Ejector and breech bolt lock
11	60 64 054-01	.40	Ejector and breech bolt lock spring
12	60 64 056-01	.40	Ejector and breech bolt lock screw
13	60 64 142-10	45.75	Receiver (factory exchange only)
14	21 25 217-01	.30	Safety lock spring screw
15	60 64 044-01	2.95	Sear
16	28 26 308-01	.30	Safety lock pin
17	60 64 080-01	.40	Stock screw bushing
18	60 64 076-01	2.40	Trigger
19	28 25 251-01	.30	Catch pin
20	60 64 145-01	13.80	Trigger guard, aluminum, for cal. .270 Win. & .30-06 Spfld.
20	60 64 345-01	$14.50	Trigger guard, aluminum, for cal. .243 & .308 Win.
19, 20 21, 30 31, 35	60 64 144-03	20.00	Trigger guard assembly, compl., aluminum, cal. .270 Win. & .30-06 Spfld.
"	60 64 344-03	20.00	Trigger guard assembly, compl., alum., cal .243 & .308 Win.
21	60 64 150-01	.30	Catch spring
22	60 10 300-01	.55	Guard screw, rear
23	60 64 094-01	.30	Safety lock spring
24	60 64 046-01	.30	Sear spring
25	60 10 298-01	.30	Filling screw
26	28 25 285-01	.30	Sear pin
27	28 25 276-01	.30	Trigger pin
28	60 64 191-01	2.95	Safety lock
29	22 71 158-01	.40	Safety lock screw
30	60 64 149-01	.70	Magazine cover catch
31	28 25 263-01	.30	Magazine cover pin
32	60 10 299-01	.30	Guard screw, front
33	60 64 079-01	2.95	Follower, cal. .270 Win. & .30-06 Spfld.
	60 64 379-01	2.95	Follower, cal. .243 & .308 Win.
34	60 64 078-01	1.20	Magazine spring, cal. .270 Win. & .30-06 Spfld.
	60 64 378-01	1.20	Magazine spring, cal. .243 & .308 Win.
35	60 64 146-01	3.45	Magazine floor plate aluminum

PARTS and SERVICE ALWAYS AVAILABLE

PRICES EFFECTIVE JULY 1, 1968 — Subject to Change Without Notice — MINIMUM ORDER $1.00

IMPORTANT: When ordering parts, always include the serial number of your rifle, along with the model letter. If you do not know the model letter, then kindly indicate the style of stock on your rifle as per the illustrations numbered 11, 12, 14, 15 or 23, and barrel length.

NOTE:
All stocks shown in this list are furnished in bright plastic finish. Should you desire an oil finished stock, the price will be reduced $17.00.

INSTRUCTIONS FOR USE OF SMITH & WESSON HIGH POWER BOLT ACTION RIFLES

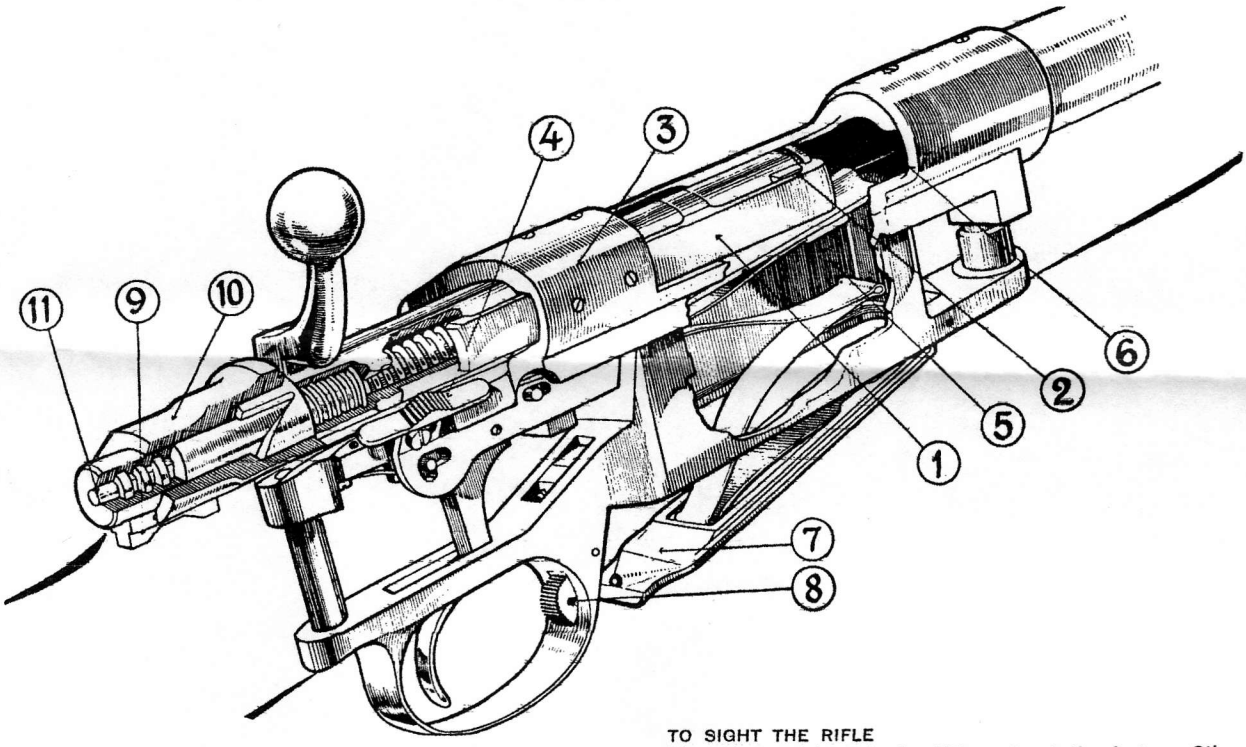

TO ASSEMBLE THE BOLT

Place the extractor (1) in a position directly over and in line with the right hand locking lug (2) and slide the complete assembly forward into the receiver (3). The bolt handle may now be turned down.

TO REMOVE THE BOLT

Unsafe by sliding the safety button (4) forward, lift the bolt-handle and draw it to the rear. At the same time push down and outward the bolt stop located on the left hand side of the rear end of the receiver.

TO OPERATE THE SAFETY

The rifle is furnished with a new type sliding safety with two different positions, on safe and off safe. When the safety button is pushed forward the rifle is off safe.

TO LOAD THE RIFLE

Raise the bolt handle and pull the bolt to the rear. Five cartridges may now be pressed down into the magazine well (5). Upon closing the bolt a loaded cartridge is fed into the chamber (6), making the rifle ready to fire.

TO REMOVE THE CARTRIDGES WITHOUT FIRING

Open the magazine cover (7) by pressing the button (8) in the front part of the trigger guard forward. As the magazine cover is hinged, the cartridges can now be easily removed from the magazine well.

TO SIGHT THE RIFLE

The rifle is sighted in for 100 yards at the factory. Other positions of the adjustable open rear sight are 200, 300 and 350 yards. The receiver is drilled and tapped for easy installation of many popular scope mounts and receiver sights.

SPECIAL SCOPE SAFETY

A special type of scope safety is not required, as the new slide safety is situated so that every type of scope on the market can be used without any difficulties.

TO DISMOUNT AND MOUNT THE BOLT

Raise and lower the bolt handle. Put a small pin, a piece of wood or a match, in the hole at the rear lower end of the cocking piece (9). Remove the bolt. Push the small lock on the front part of the bolt sleeve to the rear and turn bolt sleeve (10) until the firing pin (11), the bolt sleeve and the other parts connected with them are separated from the bolt. Place the point of the firing pin on a piece of soft material (wood), and with the left hand grasping the bolt sleeve compress the firing pin spring, allowing the cocking piece to extend beyond the sleeve itself. Holding this tension, with the right hand turn the cocking piece one quarter turn to the left. The cocking piece may now be removed. To remove the small lock from the bolt sleeve, push the lock to the rear and turn it so that the lock spring can move the lock forward, allowing the small pin to pass between the center and the outside of the bolt sleeve. The bolt is now completely dismounted and can be remounted by reversal of procedure.

IMPORTANT!

When reassembling the weapon it is absolutely necessary to tighten down the front and rear guard screws very hard. Make it a rule to check the tightness of these screws from time to time — this is necessary since the wood under certain conditions may contract due to dryness, for instance.

SMITH & WESSON

OF BANGOR PUNTA

Springfield, Massachusetts, U. S. A.